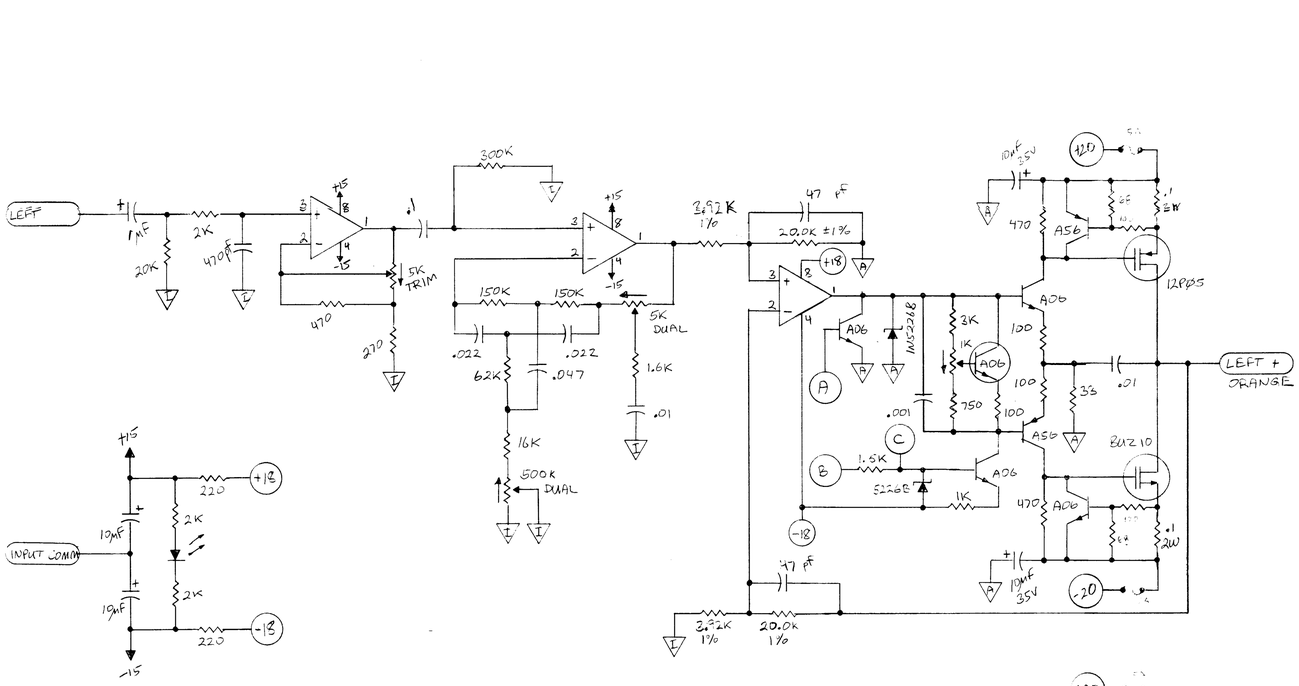

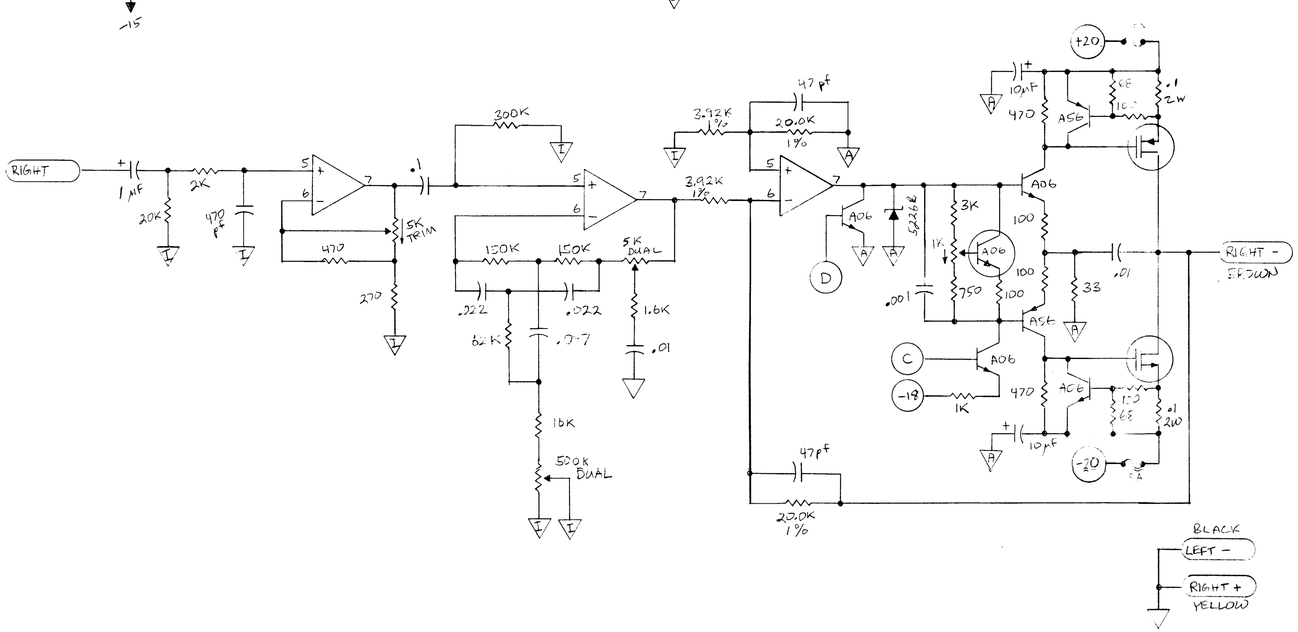

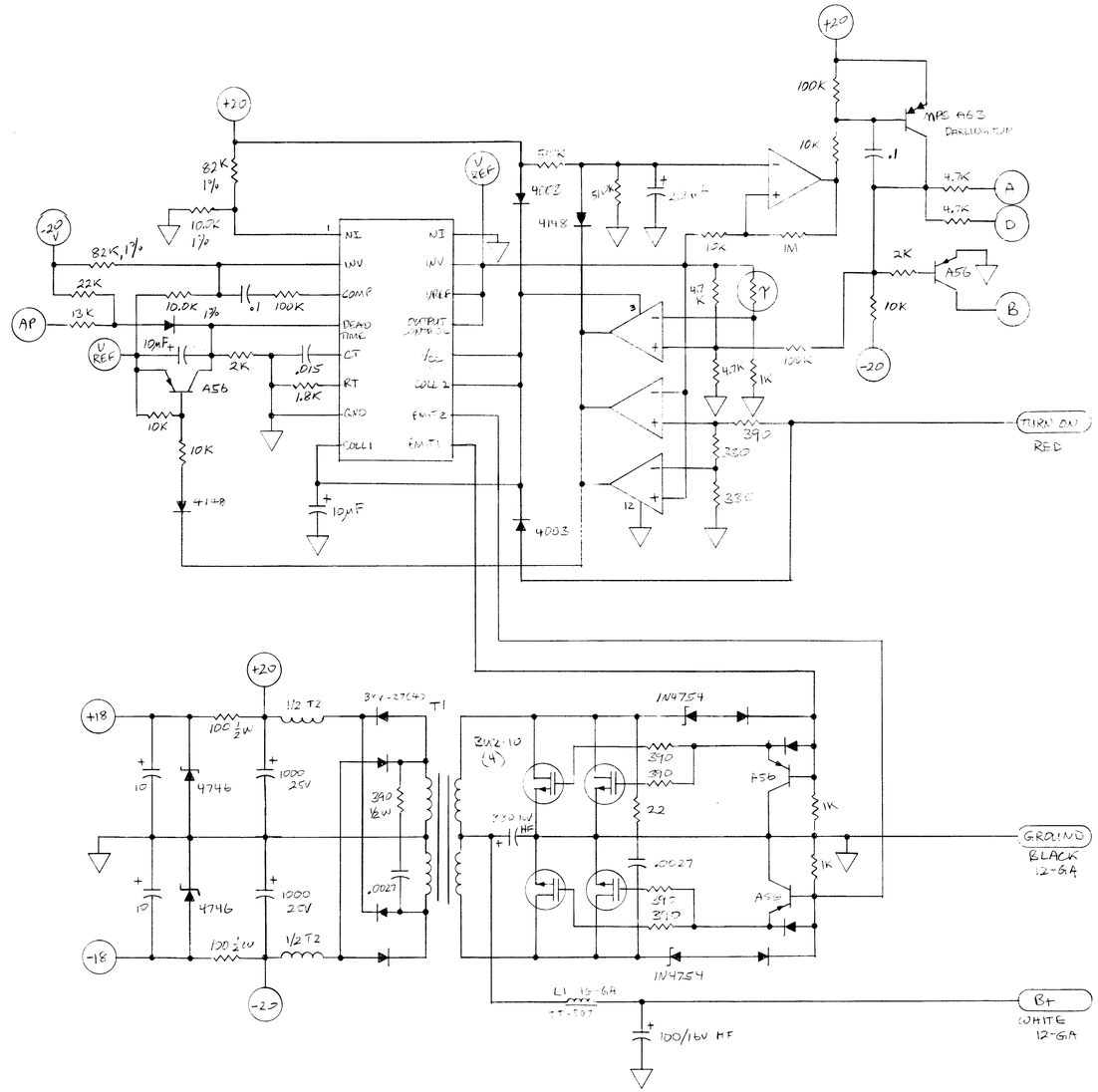

SCALE:	APPROVED BY:	DRAWN BY
DATE:		REVISED
PUNCH 75 MOSFET		
SCH-075G		DRAWING NUMBER

22 X 34 PRINTED ON NO. 1000H CLEARPRINT ®